INDULGE
IN THE LIGHT

S:CRAFT SHUTTERS & BLINDS

CREATE THE LOOK
YOU'VE ALWAYS DREAMED OF

S:CRAFT MADE-TO-MEASURE
SHUTTERS & BLINDS

CONTENTS

1. Benefits of Shutters 4-5

What sets shutters apart

2. Shutter Styles 6-16

Full Height	Bi-Fold
Tier-On-Tier	Solid Panel
Café Style	French Door
Bay Window	Special Shape
By-Pass	Conservatory
Wardrobe	Skylight

3. Shutter Materials 17

Antigua	Java
Bermuda	Fiji
Cuba	Sumatra

4. Shutter Options 18-21

Louvre Sizes
Colour Range

5. Made-To-Measure Blinds 22-25

PURE Wood Venetian Blinds
PURE Cell™ Pleated Honeycomb Blinds

6. The S:CRAFT Mark of Quality 26-27

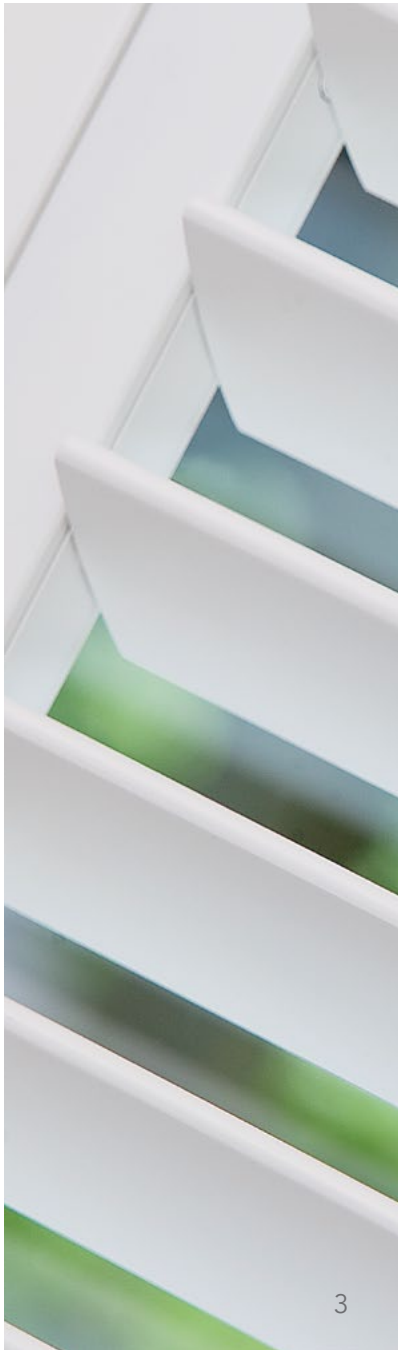

1. BENEFITS OF SHUTTERS

The name S:CRAFT has become synonymous with the finest quality made-to-measure Plantation Shutters and Blinds and the widest choice of shutter materials, styles, options and colours available in the UK.

Designed to your exacting requirements, S:CRAFT interior shutters will accentuate your windows and doors perfectly, offer a superior window covering and provide an outstanding array of unique benefits.

Ultimate light control
Each panel can be independently adjusted to temper the light and provide outstanding light control.

Supreme privacy
Shutter panels can be divided into independently controlled sections allowing natural light in but keeping unwelcome attention out.

Insulating and economical
S:CRAFT shutters not only keep you cool during the summer, but help retain heat during the winter.

Sound insulation
Adding an additional layer to your glazing, shutters not only block out light but help reduce noise levels too, making them ideal for homes near busy roads.

Awkward shapes
Shutters are possibly the only window furnishing that can be manufactured to suit all window shapes, no matter how curved or angled, small or large.

Low maintenence
S:CRAFT shutters are quick and easy to clean and offer a virtually maintenance-free existence - excellent for dust allergy sufferers.

WHAT SETS SHUTTERS APART

As demonstrated here, S:CRAFT shutters are more than just a window covering. They are a lifestyle feature, designed to function around your needs. This bi-fold track system provides complete privacy when shut, split privacy to let the light in or can be opened completely.

S:CRAFT SHUTTERS MORE VERSATILE THAN ANY OTHER WINDOW COVERING

"Take control of your surroundings, with functional style and privacy"

2. SHUTTER STYLES

S:CRAFT have the perfect solution for any room. No matter the size or shape of your windows, S:CRAFT made-to-measure shutters come in a wide range of styles to suit every room.

▼ FULL HEIGHT
Covering the full height of the window, this is our most popular and flexible installation style.

TIER-ON-TIER ▶
Independent panels top and bottom give greater adjustability to make the most of light, the view or provide you with privacy.

SHUTTER STYLES TO SUIT ALL ROOMS

◀ FULL HEIGHT
Full height shutters provide beautiful symmetry with a clean and sophisticated look.

CAFÉ STYLE ▶
Maximise light whilst providing privacy. With the top of the window un-shuttered, Café style shutters are ideal for ground level windows and town houses.

MADE-TO-MEASURE SOLUTIONS FOR BAY WINDOWS

Bay windows are notoriously hard to cover. Luckily S:CRAFT shutters can be customised to fit all bay windows and frames.

▲ TIER-ON-TIER BAY

Dating back to the medieval times and more recently Victorian architecture, bay windows hold a continuous appeal and are a quintessential British window style. No matter the size or complexity of your bay window, S:CRAFT's range of made-to-measure window shutters offer the perfect window covering for all bay windows.

◀ SQUARE BAY ▲

▼ VICTORIAN BAY

▲ BI-FOLD ▶
Bi-fold tracked shutters work well in conjunction with bi-fold doors, allowing you to concertina large runs of shutters out of the way and bring the outside in.

TRACKS & WARDROBES

◀ WARDROBE
The robust nature of S:CRAFT shutters and their high quality finish provides a fantastic solution for wardrobe doors. Solid panels, solid bases and fixed louvres can be specified to meet your aspirations.

BY-PASS
Sliding doors, room dividers or simply a privacy screen, our By-pass system provides an excellent solution.

▲ SOLID PANEL
Solid shutters have been used in the UK for more than 200 years and provide a more traditional finish to your window.

"Let your mind be creative and let S:CRAFT's professional stockists do the rest"

FRENCH DOOR & SOLID PANEL SHUTTERS

FRENCH DOORS ▼
Due to the bespoke nature of our products, we are able to create cut-outs around your door handles to suit each bespoke installation.

MADE-TO-MEASURE SOLUTIONS
TO SUIT ANY WINDOW SHAPE & SIZE

Even the most unusual window shapes can be catered for within the S:CRAFT shutter range. Most popular styles include arches, circles and gable installations.

▲ CURVED
S:CRAFT shutters can be designed to match almost any radius allowing you to enjoy your architecture whilst enjoying the light.

ANGLED ▶
Ideal for gables or awkward, angled windows, S:CRAFT shutters provide an effective solution where many window coverings fail.

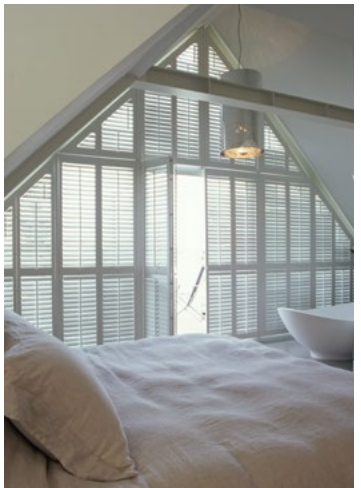

▲ ARCHED ▼

TALL & CURVED
No matter how impressive the scale of your windows our shutters can be designed to fit.

SHUTTER SHAPES
Below is a selection of the most popular shapes that our customers ask for and demonstrates the flexibility of our shutter solutions.

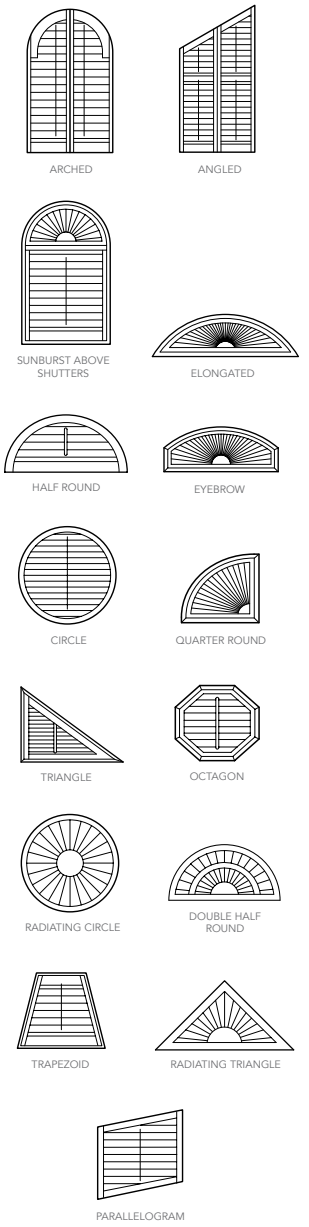

CONSERVATORY AND SKYLIGHT SHUTTERS

◀ SKYLIGHT

S:CRAFT's range of skylight and conservatory shutters provide a stylish yet highly practical light and heat control solution for your windows. Ordering shutters for your skylights really couldn't be simpler, our stockists will just need your window model number.

The combination of engineered panels and a high quality finish with a final UV protective layer provide an ideal solution for conservatory installations. Let as little or as much light in as you want.

▼ CONSERVATORY

3. SHUTTER MATERIALS

S:CRAFT shutters come in a wide range of materials to suit every budget, style and taste. Manufactured to exceptionally high standards and built to last, S:CRAFT shutters come with a 3 year guarantee.

ANTIGUA

Our ANTIGUA range is made from high quality MDF covered in a patented polymer coating. Antigua is a stylish yet affordable entry-level shutter solution available in 5 popular shades of white.

BERMUDA

Our BERMUDA range is made from robust MDF frames and ABS louvres. Available to order in 28 contemporary colours, Bermuda more closely resembles the finish of real hardwood shutters.

CUBA

Our CUBA range is our entry-level hardwood range made from MDF frames but featuring real hardwood panels to provide a robust frame with lightweight panels.

JAVA

Our JAVA range is 100% waterproof and therefore ideal for bathrooms and other wet areas that suffer from fluctuations in moisture.

FIJI

Our FIJI range is made from real hardwoods and available to order in a wide range of options, colours and stains to offer a beautiful shutter solution to suit a multitude of installations.

SUMATRA

Our SUMATRA range is made from the finest quality FSC®certified White Teak and is available to order in the widest range of options to offer the ultimate shutter solution.

FSC
www.fsc.org
FSC® C112896
The mark of responsible forestry

The colours used above are for illustrative purposes only and may not reflect the actual colours of the shutters.

4. SHUTTER OPTIONS

LOUVRE SIZES

The right choice of louvre size is essential to creating the perfect look. S:CRAFT offer six main louvre sizes depending on the shutter range chosen, plus a solid shutter version and a blackout shutter with integrated honeycomb blind for ultimate light exclusion. When choosing your louvre, you'll need to decide which size best suits your window while allowing the louvres to be opened without making contact with your window/furniture, with larger louvre sizes requiring more room to open.

32mm louvre

47mm louvre

64mm louvre

76mm louvre

89mm louvre

114mm louvre

Solid shutter

In the Sumatra range a flat louvre option is also available in a 60mm and 84mm louvre.

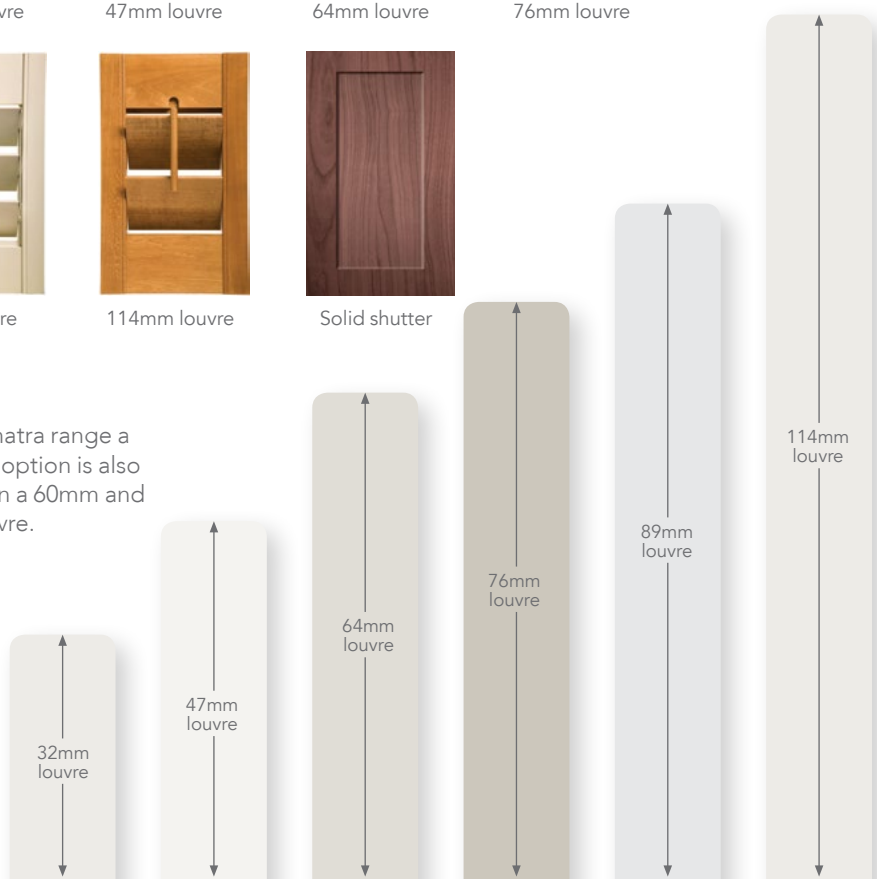

S:CRAFT SHUTTERS
PERFECT IN EVERY DETAIL

COLOURS AND STAINS

Unlike cheaper imitations, all S:CRAFT shutters are given 6 coats of paint or stain to give a tough, lustrous finish and to help prevent fading the final layer is UV protected.

CUSTOM COLOUR

Our custom colour option enables us to offer you virtually any colour finish you require and we can match the UK's leading paint companies colours.

COLOUR RANGE

S:CRAFT offer a full colour palette, utilising some of the most popular and en-vogue colours in the market place. However, should you not find the colour that you desire, then S:CRAFT also offer a custom colour match service, providing a perfect match to any interior.

000 Custom Colour ■▼
001 Pure White ◗★◆▲■▼
002 Extra White ★■▼
003 Silk White ◗★◆▲■▼
004 Bright White ◗★◆▲■▼
006 Pearl ◗★◆▲■▼
007 Ivory Lace ★■▼
008 Marshmallow ★■▼
009 Creamy ◗★◆■▼
011 Cameo ★▲■▼

012 Crisp Linen ★■▼
013 Bisque ★◆▲■▼
014 Alabaster ★■▼
016 Butter ★■▼
019 String ★■▼
032 Sea Mist ★■▼
048 Chai ★■▼
049 Stone Grey ★■▼
051 Brown Grey ★■▼
053 Clay ★■▼

064 Wonston 203 ★■▼
065 Micheldever 208 ★■▼
066 Winchester White 2010 ★■▼
067 Candover White 2012 ★■▼
068 Popham 2013 ★■▼
069 Worthy White 226 ★■▼
070 Stockbridge White 201 ★■▼
071 Barnes 15 ★■▼
072 Mattingley 267 ★■▼
108 Rustic Grey ■▼

109 Weathered Teak ■▼
110 Limed White ■▼
114 Taupe ■▼
202 Golden Oak ■▼
204 Oak Mantle ■▼
205 Goldenrod ■▼
211 Cherry ■▼
212 Dark Teak ▼
214 Cocoa ■▼
215 Cordovan ■▼

219 Mahogany ■▼
220 New Ebony ■▼
221 Black Walnut ■▼
227 Red Oak ■▼
229 Rich Walnut ■▼
230 Old Teak ■▼
232 Red Mahogany ■▼
237 Wenge ■▼
862 French Oak ■▼

Antigua ◗
Bermuda ★
Cuba ◆
Java ▲
Fiji ■
Sumatra ▼

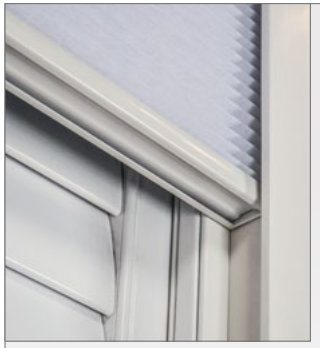

ROOM DARKENING BLINDS

From children's bedrooms to media room installations, our room darkening shutter/ blind solution should be your first choice. S:CRAFT have 15 sumptuous blind colours to choose from.

C4001 Snow White
C4002 Whisper White
C4101 Steel Grey
C4102 Terra
C4103 Mineral

C4105 Dusk
C4201 Black Ink
C4401 Warm Sand
C4402 Mocha
C4405 Teak

C4408 Chai
C4504 Desert
C4510 Brie
C4511 Latte
C4601 Fog Green

5. BLINDS

PURE WOOD VENETIAN BLINDS

PURE WOOD

BLINDS

TAILOR-MADE FOR A PERFECT FIT

PURE WOOD VENETIAN BLINDS

S:CRAFT's PURE Wood made-to-measure blinds suit any kind of window and are designed to complement our range of equivalent shutters to perfection.

- Two louvre widths: 50mm and 64mm
- 14 paint and 19 stain colours to choose from
- Extensive choice of valences, toggles and decorative tapes
- Multiple blinds on a single head rail
- Custom colour available

PURE CELL PLEATED HONEYCOMB BLINDS

PURE™ CELL BLINDS

Our stunning range of PURE CELL™ Pleated Honeycomb Blinds offer a highly versatile yet stylish window covering to complement any home or work space perfectly.

With a range of options to choose from including over 70 contemporary colours, 3 head rails, single or double cell fabric and bottom up/top down capabilities, our pleated blinds offer enhanced privacy and light control over standard blinds.

6. THE S:CRAFT MARK OF QUALITY

BUILT TO PERFECTION GUARANTEED TO LAST

Using unique production methods, such as transverse multi-ply stiles, we can ensure that S:CRAFT shutter panels are unlikely to bow or warp. And for added strength we use only mortise and tenon joints. This also helps to minimise any panel movement which may cause hairline cracking of paint finishes at the joint.

For further protection, we also engineer the shutter panels with a grooved overlap to mask and absorb any joint expansions.

RESPONSIBLY SOURCED

ENERGY SAVING

CHILD SAFE

"Where expectations are realised every step of the way"

S:CRAFT shutters and blinds are made to the highest standards and therefore we're proud to offer 1 year's guarantee on our blinds and 3 year's guarantee on our shutters to help safeguard your investment and provide you peace of mind.

LOOK FOR THE S:CRAFT MARK OF AUTHENTICITY

We're proud of our brand which is why all genuine S:CRAFT shutters carry the S:CRAFT mark of quality.

To ensure the shutters you receive are an authentic S:CRAFT product, look out for the S:CRAFT logo, discretely positioned on each installation, on the inside of the right hand frame.

Your nearest S:CRAFT stockist is:

:CRAFT

www.s-craft.co.uk

Copyright. S:CRAFT 2015. All rights reserved.
ShutterCraft Ltd (Trading as S:CRAFT).

All S:CRAFT's products are genuinely made-to-measure so beware of cheap imitations. All S:CRAFT's products are branded for your peace of mind.